Slim double wall drawer slide, height 86mm

Basic components

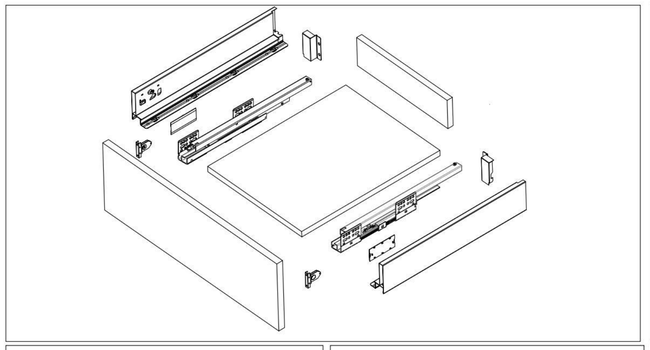

Cutting dimensions of 16mm thick MDF

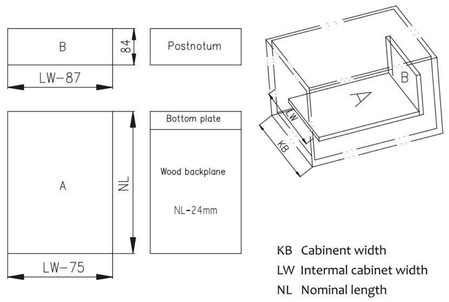

Cabinet space requirements

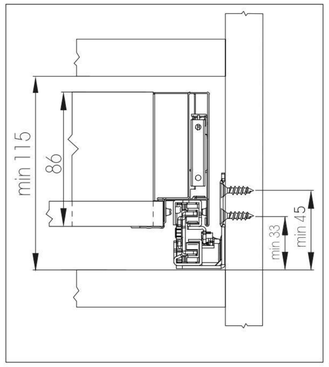

Front connectors panel mounting dimensions

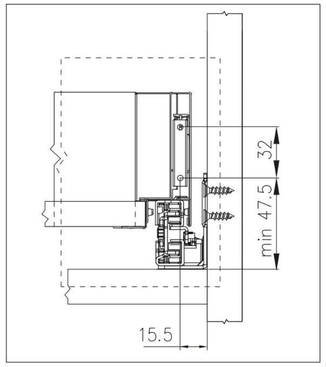

The side panel back mounting size

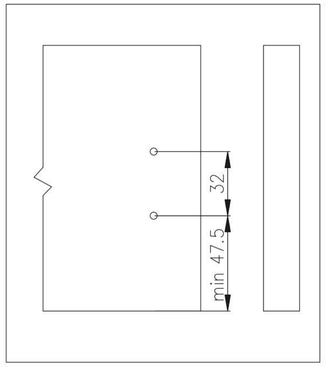

Mounting dimensions for the back plate

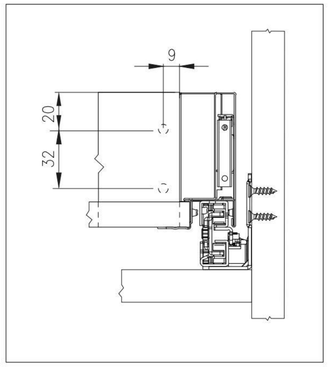

The cabinet boay rail mounting dimensions

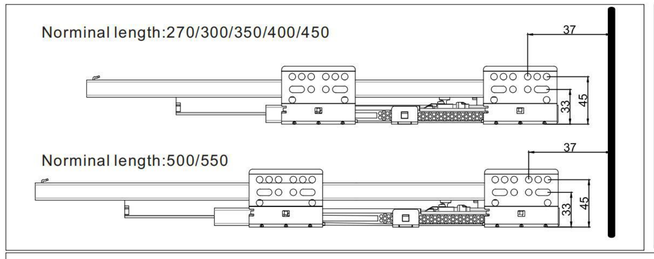

Rail mounting hole distance

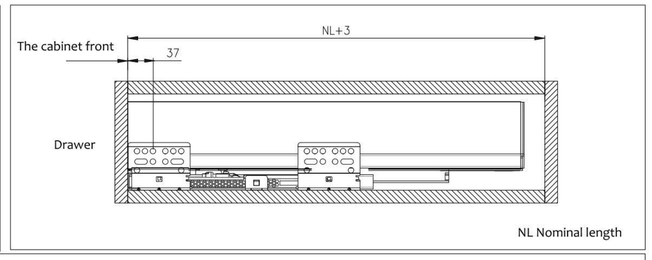

The drawer is installed

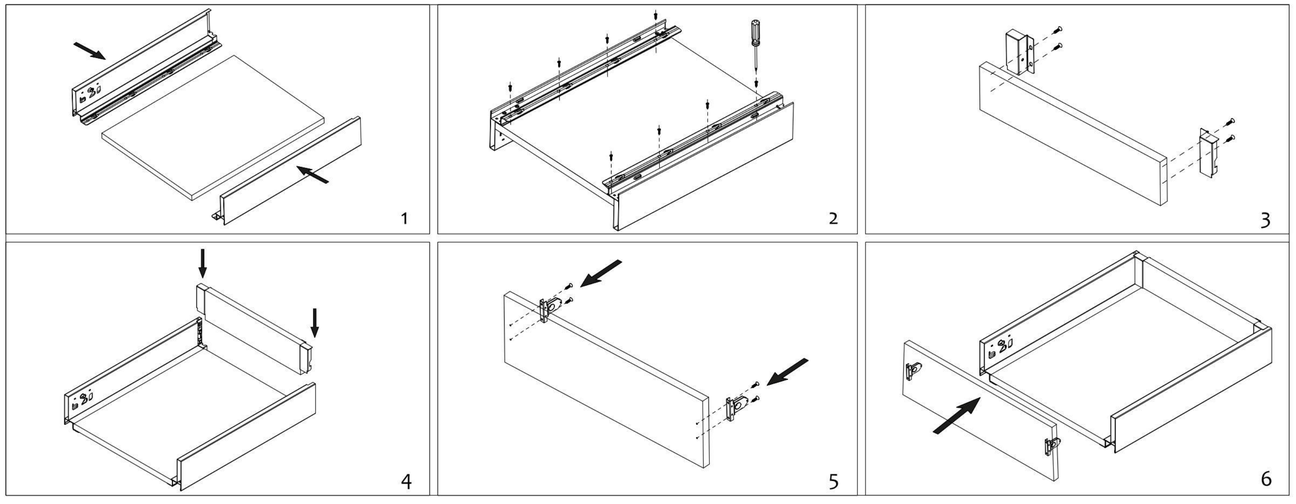

The drawer is installed

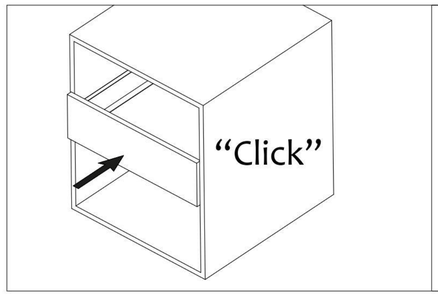

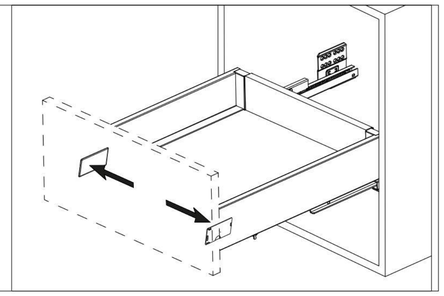

Regulation

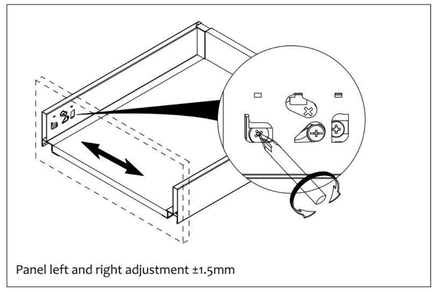

Panel left and right adjustment ±1.5mm

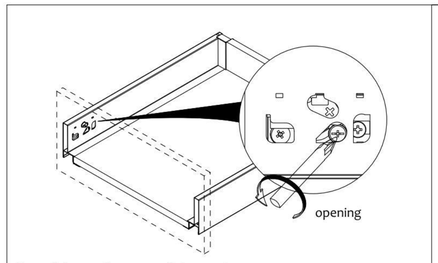

Up and down adjustment of the panel ±2mm

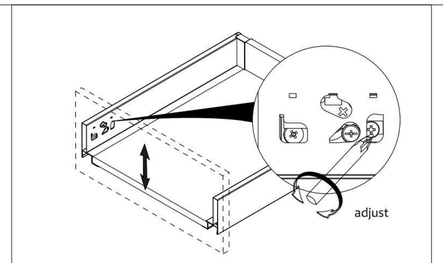

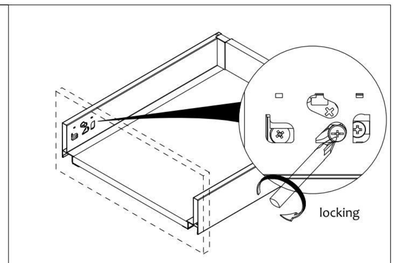

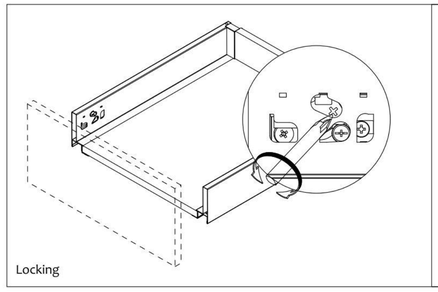

Locking

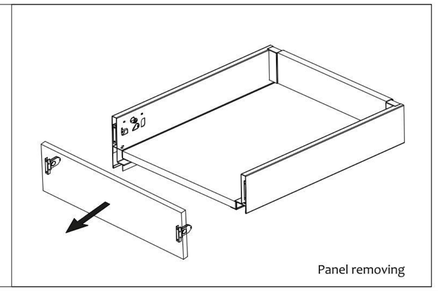

Panel removing
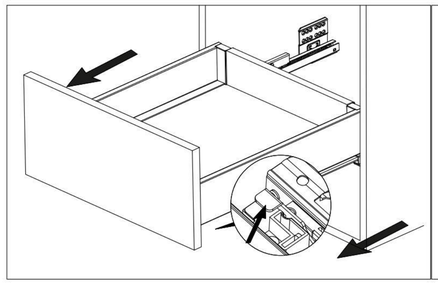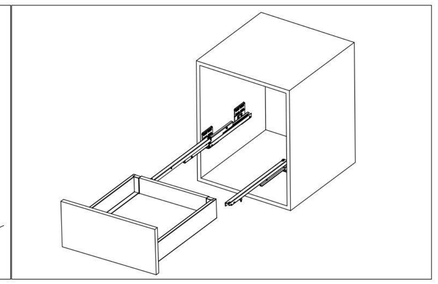
Drawer removal